EE6094
CAD for VLSI Design

Checker

Andy, Yu-Guang Chen
Assistant Professor, Department of EE
National Central University
andyygchen@ee.ncu.edu.tw
Slides Credit: TA黃柏燁/TA施奕瑄

Checker

- What is the checker?
  - Help you to check whether your solution is correct.
- Checker for PA2
  - Cut size
  - Partition balance
  - Modules

Checker

- How to use the checker?
  - Step1: Make sure you put your checker, input case and your output file case.out at the same folder.

Name	Size (KB)
..	
case1	1
case1.out	1
PA2_CHECKER	109

  - Step2: Key in the following commands to run the checker.

./PA2_CHECKER *case case.out*

```
[ta112521031@cad ~/CAD]$ ./PA2_CHECKER case1 case1.out
```


Checker

- If you get the **Permission denied** error, key in the following commands and try step2 again.

chmod 700 PA2_CHECKER

```
[ta112521031@cad ~/CAD]$ ./PA2_CHECKER case1 case1.out
./PA2_CHECKER: Permission denied.
[ta112521031@cad ~/CAD]$ chmod 700 PA2_CHECKER
```

Checker

◆Partition result example.

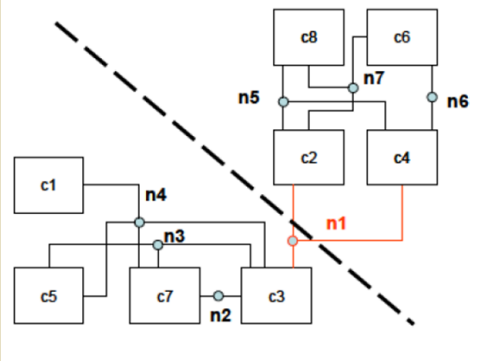

Checker

◆Example

➢ If your partition result is legal. Your error count is 0 and you will get the “Well Done !!!” message.

```
cut_size 1
A
c1
c3
c7
c5
B
c2
c4
c8
c6
```

case.out

```
[ta112521031@cad ~/CAD]$ ./PA2_CHECKER case1 case1.out
error count: 0
Well Done !!!
```

result

Checker

- However, there are some errors which will cause your result illegal.
- We will give you some examples in following slides.

Checker

- Example 1
  - If your result's cut size does not match your partition result, your error count is 1 and you will get the "**cut size mismatch**" message.

```
cut_size 2
A
c1
c3
c7
c5
B
c2
c4
c8
c6
```

case.out

```
[ta112521031@cad ~/CAD]$ ./PA2_CHECKER case1 case1.out
error count: 1
1. cut size mismatch
```

result

Checker

- Example 2
  - If your partition result does not meet the constraint of *|size(A) – size(B)| <= total_module_size/5,* which means your result is unbalance. Your error count is 1 and you will get the "**unbalance partition**" message.

cut_size 2
A
c1
c5
B
c2
c4
c8
c6
c7
c3

size(A): 2
size(B): 6
total_module_size: 8
|2-6| > 8/5 = 1.6

```
[ta112521031@cad ~/CAD]$ ./PA2_CHECKER case1 case1.out
error count: 1
1. unbalance partition
```

case.out

result

Checker

- Example 3
  - If there are some modules disappeared in your partition result, you will get "**module disappear in partition result**" messages.

cut_size 1
A
c1
c5
c7
B
c2
c4
c8
c6

c3 is disappear

```
[ta112521031@cad ~/CAD]$ ./PA2_CHECKER case1 case1.out
error count: 1
1. module disappear in partition result
```

case.out

result

Checker

- Example 4
  - If there are some redundant modules existed in your partition result, your error count is 1 and you will get "**redundant module in partition result**" messages.

```
cut_size 1
A
c1
c3
c5
c7
B
c2
c4
c8
c6
c9
```

c9 is a redundant module

case.out

```
[ta112521031@cad ~/CAD]$ ./PA2_CHECKER case1 case1.out
error count: 1
1. redundant module in partition result
```

result